48" Professional Side-by-Side with Glass Door

Born of 100% steel (and a good bit of bravado), the model 648PROG is a true masterpiece of preservation. Its glass door, sculpted metal, dual refrigeration with three evaporators and advanced controls marry performance and design in a bold new way for home refrigeration. So it not only keeps foods magnificently fresh, it brings the whole kitchen tastefully up to date. Model 648PROG can be built-in or used in a free-standing application.

Model 648PROG shown in a built-in application.
Also shown is Wolf model DF486C dual fuel range.

FEATURES

- Handles coordinate with Wolf ranges.
- Stainless steel interior and exterior.
- Dual refrigeration system with two compressors and three evaporators keeps food fresher longer.
- Microprocessor and interior touch control panel with exterior digital temperature display.
- Triple-pane, UV-resistant glass door.
- Ceiling lighting in both upper cabinets with LED side lighting in refrigerator.
- Adjustable spill-proof glass shelves.
- Slide-out stainless steel bins fit neatly under refrigerator glass shelves.
- Touch-and-glide crisper drawer with tight-sealing clear cover.
- Interior drawer dividers can be used in either refrigerator drawer.
- Precision-built auto-close door hinges.
- Easy-access flip-up grille.
- Automatic ice maker with advanced water filtration system.

Slide-out bins.

Glass crisper lid.

INTERIOR FEATURES

- **Refrigerator (door and two drawers)**
  3 Adjustable Glass Shelves
  1 Stationary Glass Shelf
  2 Adjustable Stainless Steel Slide-Out Bins
  1 Glass Crisper Lid
  Interchangeable Drawer Dividers
  Triple-Pane UV-Resistant Glass Door
  Optional High Altitude Glass
- **Freezer (door and two drawers)**
  Automatic Ice Maker
  Water Filtration Filter
  3 Adjustable Stainless Steel Shelves
  1 Stationary Stainless Steel Shelf
  Stainless Steel Ice Bucket
- Exterior Temperature Display
- Auto-Close Advanced Hinge System

ACCESSORIES

- Freestanding kit with two stainless steel side panels and top.
- Stainless steel side panel.
- Stainless steel front and side kickplates.
- Slide-out stainless steel refrigerator bins.
- Refrigerator drawer dividers.
- Replacement water filter.
- 90° door stop.

Accessories are available through your Sub-Zero dealer. For local dealer information, visit the find a showroom section of our website, subzero.com.

48" Professional Side-by-Side with Glass Door

OVERALL DIMENSIONS

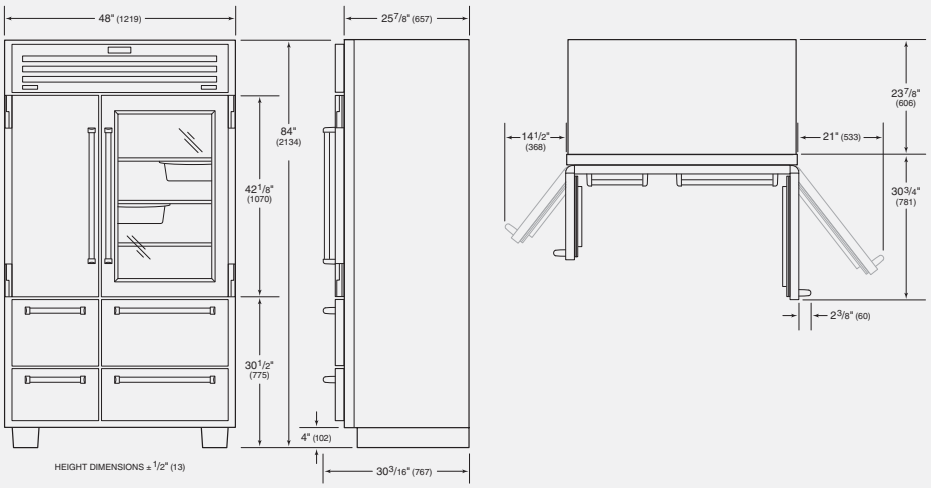

Unit dimensions may vary by ± 1/8".

Dimensions in parentheses are in millimeters unless otherwise specified.

SPECIFICATIONS

Overall Width	48"
Overall Height	84"
Overall Depth	24"
Door Swing Clearance	30 3/4"
Refrigerator Capacity	18.4 cu ft
Freezer Capacity	11.7 cu ft
Finished Opening (standard)	47 1/2" W x 83 3/4" H x 24" D
(flush)	48" W x 84 1/8" H x 26" D
Minimum Height Required	83 1/2"
Electrical Requirements	115 V AC, 60 Hz 15 amp dedicated circuit
Plumbing Requirements	1/4" OD copper line 35–120 psi
Annual Energy Usage	$74*
Shipping Weight	875 lbs

**Based on 10.65 cents per kilowatt hour.*

INSTALLATION NOTES

Model 648PROG can be used free-standing or installed as a standard or flush built-in application. For standard built-in installations, the face frame of the unit will extend 2" beyond cabinetry. In flush built-in installations, the front of the face frame will be flush with surrounding cabinetry.

Complete installation specifications, including panel sizes, can be found on our website, subzero.com/specs.

INSTALLATION SPECIFICATIONS

Standard and Flush Built-In

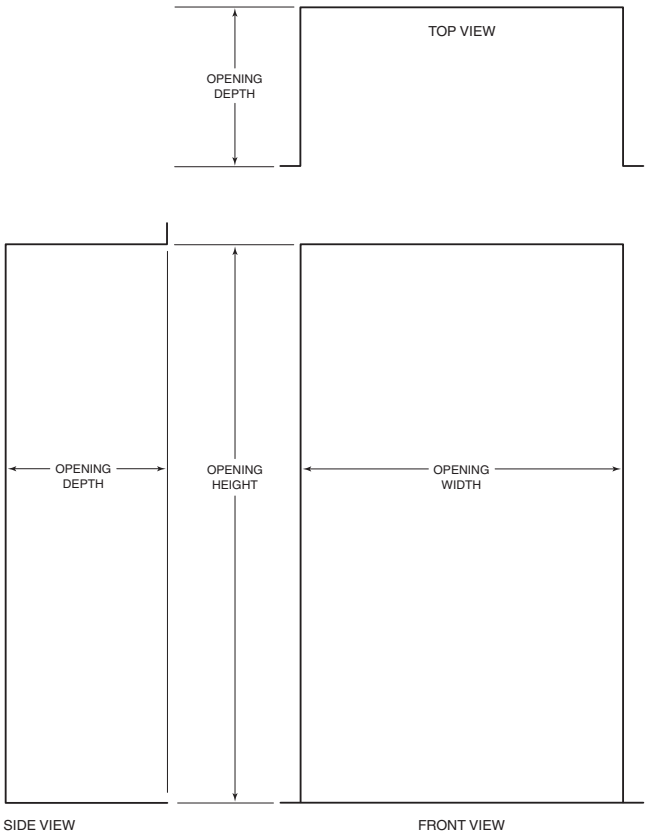

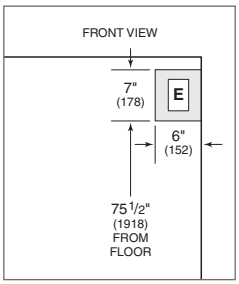

Location of Electrical Supply

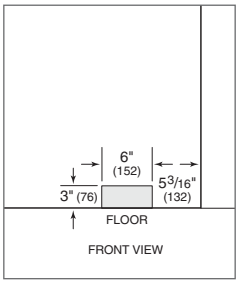

Location of Water Supply

Opening Dimensions	Standard	Flush
Opening Width	47 1/2"	48"
Opening Height	83 3/4"	84 1/8"
Opening Depth	24"	26"

©Sub-Zero, Inc. all rights reserved. Features and specifications are subject to change at any time without notice.